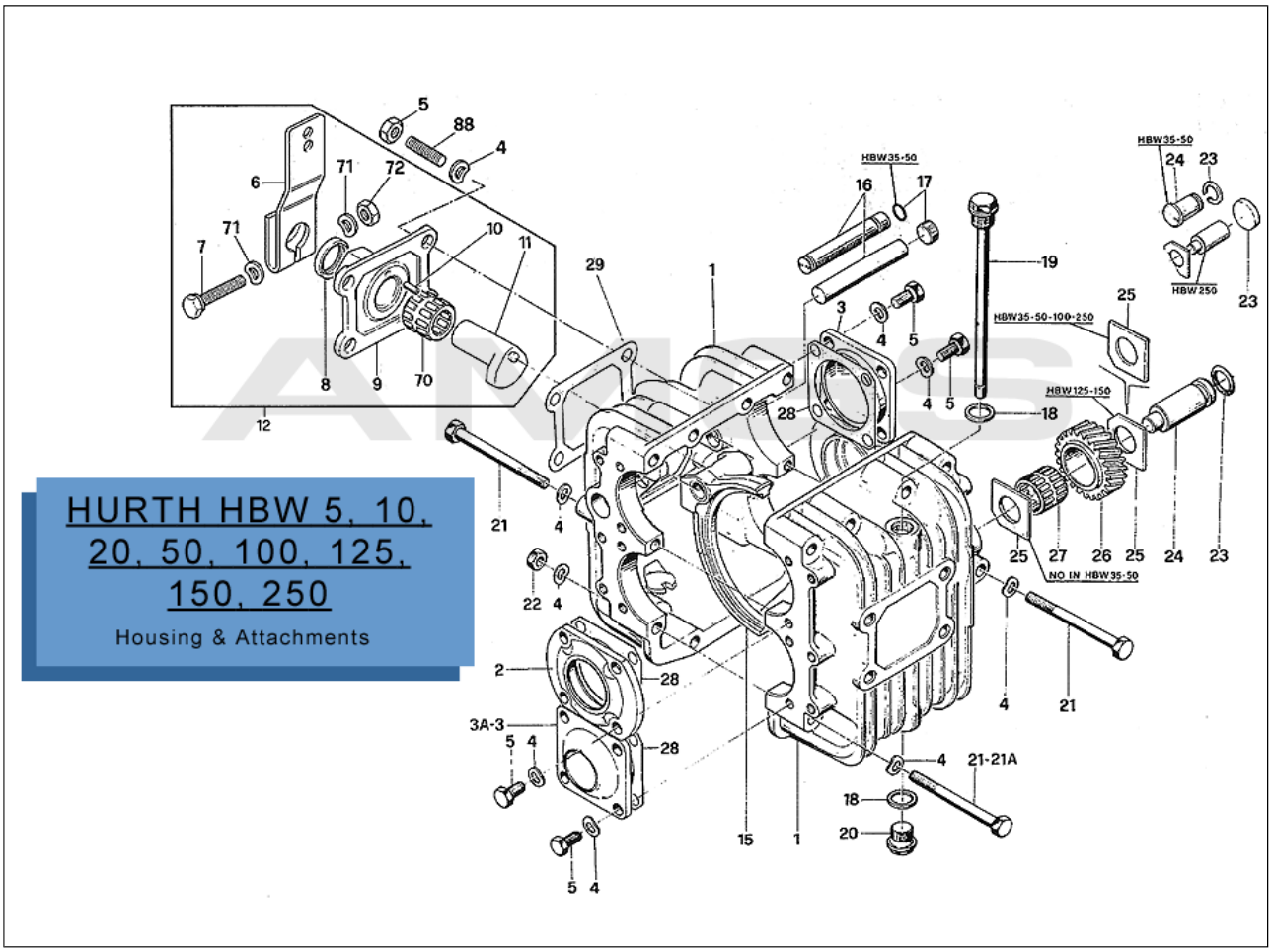
HURTH HBW 5, 10, 20, 50, 100, 125, 150, 250
Housing & Attachments
HBW35-50
HBW35-50-100-250
HBW125-150
HBW250
NO IN HBW35-50