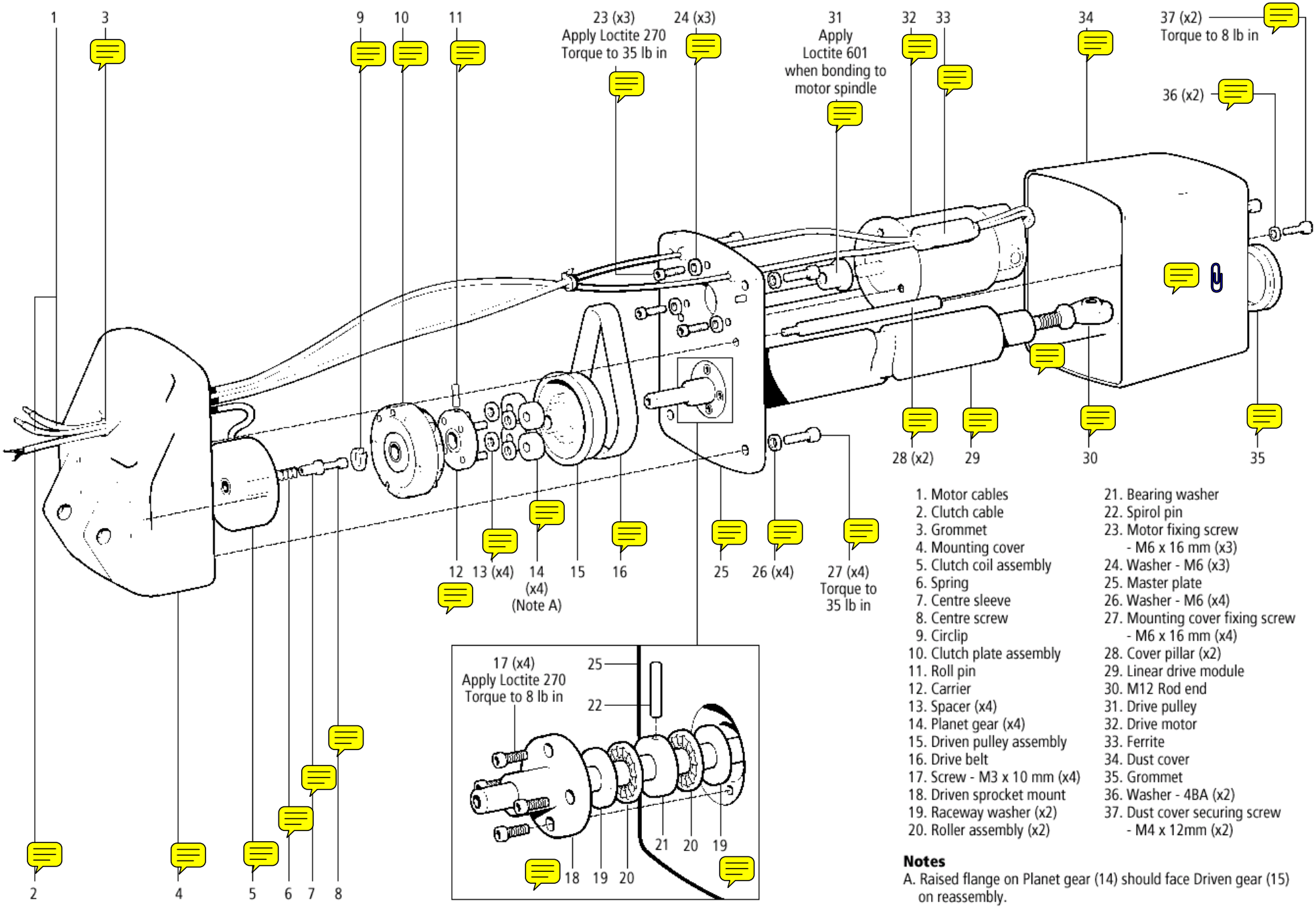


1. Motor cables
2. Clutch cable
3. Grommet
4. Mounting cover
5. Clutch coil assembly
6. Spring
7. Centre sleeve
8. Centre screw
9. Circlip
10. Clutch plate assembly
11. Roll pin
12. Carrier
13. Spacer (x4)
14. Planet gear (x4)
15. Driven pulley assembly
16. Drive belt
17. Screw - M3 x 10 mm (x4)
18. Driven sprocket mount
19. Raceway washer (x2)
20. Roller assembly (x2)
21. Bearing washer
22. Spirol pin
23. Motor fixing screw - M6 x 16 mm (x3)
24. Washer - M6 (x3)
25. Master plate
26. Washer - M6 (x4)
27. Mounting cover fixing screw - M6 x 16 mm (x4)
28. Cover pillar (x2)
29. Linear drive module
30. M12 Rod end
31. Drive pulley
32. Drive motor
33. Ferrite
34. Dust cover
35. Grommet
36. Washer - 4BA (x2)
37. Dust cover securing screw - M4 x 12mm (x2)

**Notes**

A. Raised flange on Planet gear (14) should face Driven gear (15) on reassembly.

D3488-2